FORGED CHAINS
& SPROCKETS

4B GROUP

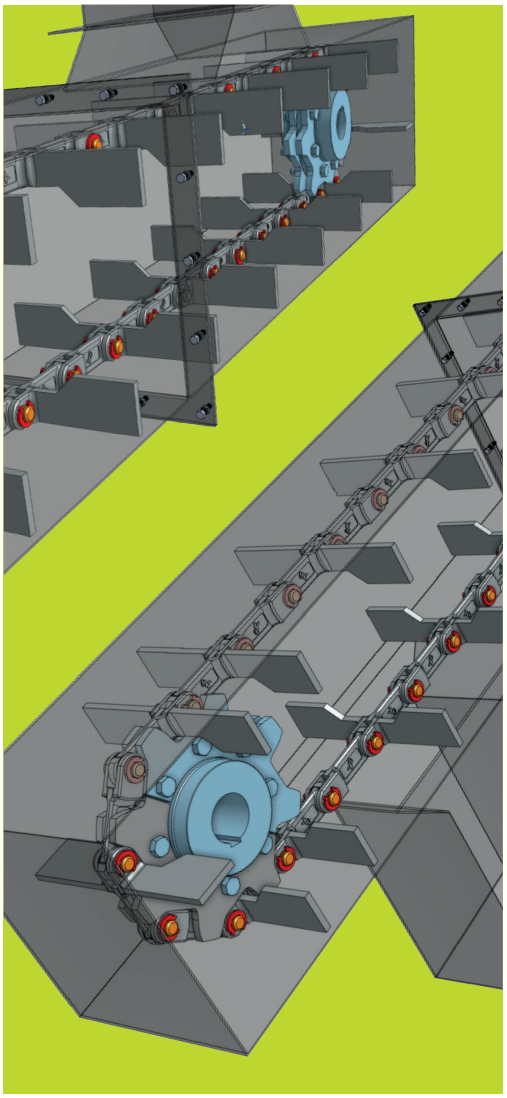

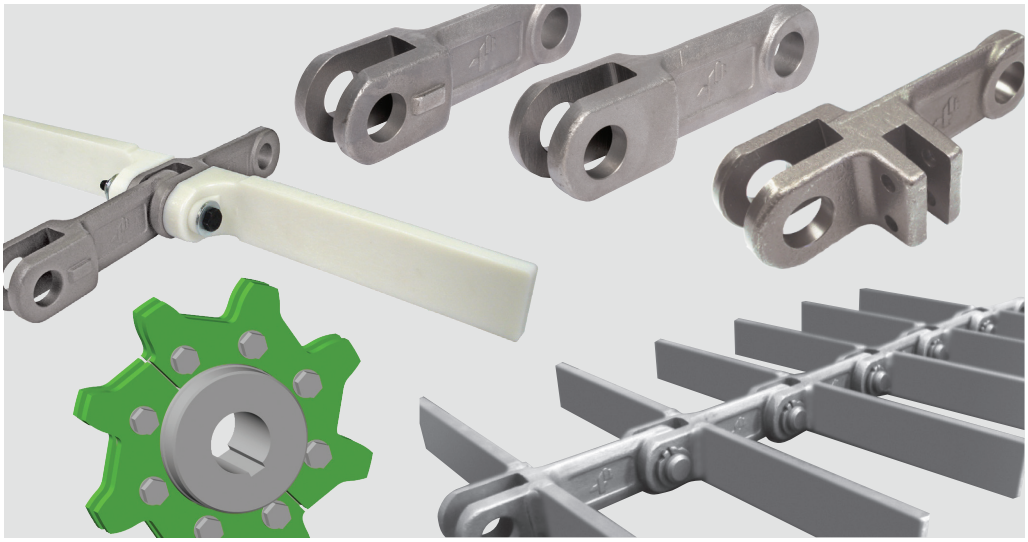

A Worldwide Manufacturer of
High Quality, Technologically Advanced
Material Handling & Electronic Components

BETTER BY DESIGN

DROP FORGED CHAIN

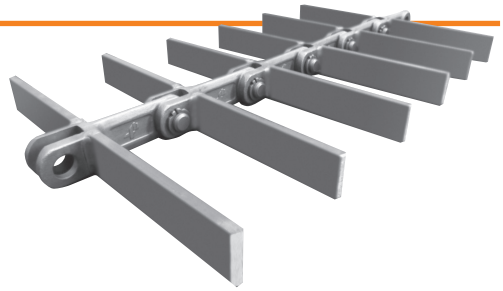

4B's drop forged chain is made of special heat treated alloy steel, case hardened to Rockwell C57 - C62 with a ductile core hardness of Rockwell C40.

4B's superior heat treatment technique provides the optimum chain link with a more resilient ductile core for shock resistance, and an extremely hard exterior surface for superior wear resistance.

4B's drop forged chain is backed by an international network of companies with over 130 years of experience, and a global team of engineers and sales professionals that can provide you with practical solutions for all your material handling applications.

DROP FORGED CHAIN

STANDARD LINK

BOLT 'N' GO LINK

Links and pins are available in stainless steel

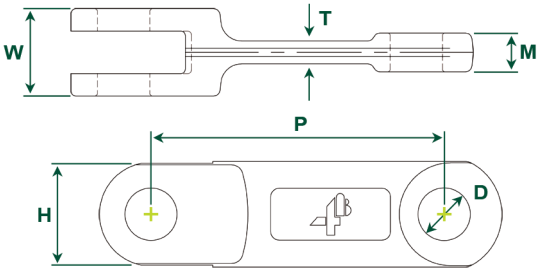

Standard Link

Chain Link	Min Breaking Load (kN)	Case Hardness	Case Depth (mm)	Core Hardness	Weight (Per Link) (kg)	Bolt 'N' Go Compatible	Dimensions					
							P (mm)	H (mm)	T (mm)	W (mm)	M (mm)	D (mm)
4B102LA	150	Rockwell C57-C62	0.5	Rockwell C40	0.36	No	102	36	6	25	8	14
4B102NA	180	Rockwell C57-C62	0.5	Rockwell C40	0.38	Yes	102	36	7	28	12	14
4B125NA	200	Rockwell C57-C62	0.6	Rockwell C40	0.70	Yes	125	35	10	36	15	16
4B142LA	250	Rockwell C57-C62	0.7	Rockwell C40	0.66	No	142	40	10	31	14	18.2
4B142NA	300	Rockwell C57-C62	0.7	Rockwell C40	1.08	Yes	142	50	12	42	18.7	25
4B142HA	450	Rockwell C57-C62	0.7	Rockwell C40	1.76	Yes	142	50	16.5	62	28.5	25
4B150NA	300	Rockwell C57-C62	0.7	Rockwell C40	1.20	Yes	150	49	13	36	15	25
4B160NA	350	Rockwell C57-C62	0.8	Rockwell C40	1.30	Yes	160	44.5	13	42	19.5	20
4B175NA	520	Rockwell C57-C62	1.0	Rockwell C40	2.73	No	175	60	16	72	22	30
4B200NA	600	Rockwell C57-C62	1.0	Rockwell C40	2.85	No	200	60	18	68	30	30
4B216NA	600	Rockwell C57-C62	1.0	Rockwell C40	3.66	No	216	75	19	59	26	35
4B250NA	700	Rockwell C57-C62	1.0	Rockwell C40	4.26	No	250	75	18	70	32	32
4B260NA	700	Rockwell C57-C62	1.0	Rockwell C40	5.38	No	260	75	21	71	31	32

Free Engineering Design Service - contact 4B or visit: www.go4b.com

BOLT 'N' GO™

PATENTED

The Bolt 'N' Go flight system is a revolutionary assembly method for drop forged chain. Link and flight assembly is made easy by using a standard bolt and mechanical lock nut with a high strength, heat treated hollow pin. There are no circlips and no intricate assembly is required. There is no welding of flights, no need to remove chain from the conveyor for installation, and no issues with strength. Just bolt the links and the flights together. It's easy, simple and reliable!

FORGED CHAIN

Detailed view of Bolt 'N' Go showing assembly method

BOLT 'N' GO SYSTEM

Bolt 'N' Go Chain	Nylon Flight Maximum Width
4B102BNA	up to 390 mm
4B142BNA	up to 752 mm
4B142BHA	up to 772 mm

NOTE: 4B125BNA, 4B150BNA & 4B160BNA Chain also available, contact 4B for more information.

Feed Mill Application using Bolt 'N' Go Chain with Nylon Flights

Assembled Bolt 'N' Go Chain

WELDED FLIGHTS & PINS

TYPICAL WELDED FLIGHT ATTACHMENTS

Square Bar Flight

Flat Bar Flight

Paddle Flight

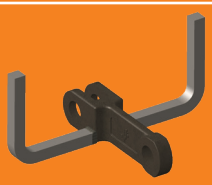

U Flight

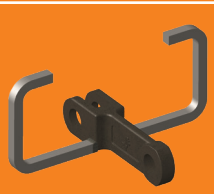

Closed U Flight

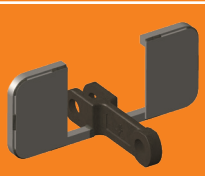

Closed U Flight with Filler Plates

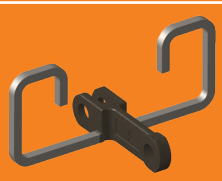

00 Flight

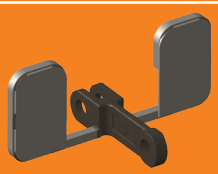

00 Flight with Filler Plates

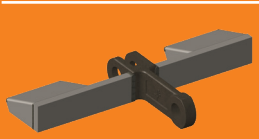

Return Cups

Note:

Custom flights are available, based on customer specifications.

STANDARD PIN OPTIONS

Forged Head Pin, Collar and Roll Pin

Forged Head Pin and One Clamp

Plain Pin and Two Clamps

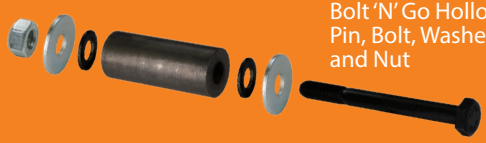

Bolt 'N' Go Hollow Pin, Bolt, Washers and Nut

Note: Clamps, roll pins, hex bolts and lock nuts must not be re-used. Install one time and discard after use.

Links, pins and circlips available in stainless steel.

DOUBLE & TRIPLE LINKS

4B's double and triple links are forged with the same quality, strength and durability as our standard links.

DOUBLE LINK

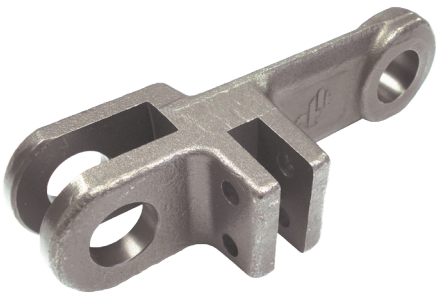

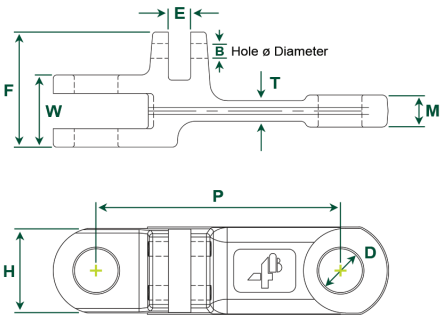

TRIPLE LINK

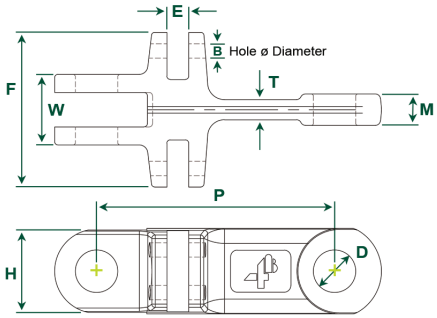

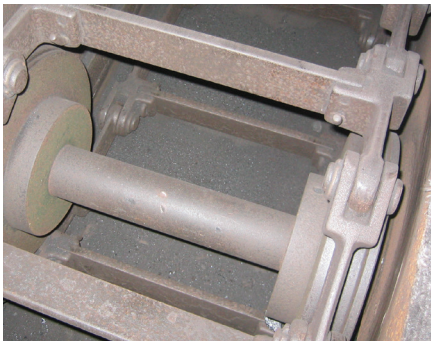

Typical Double Strand Chain Application

Triple Configuration

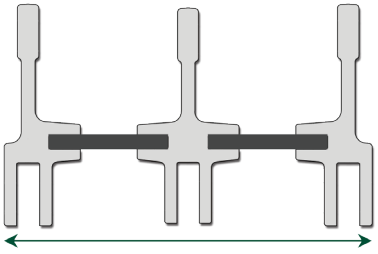

Widths to 3.7m

Chain Link	Min Breaking Load (kN)	Case Hardness	Case Depth (mm)	Core Hardness	Weight (Per Link) (kg)	Bolt 'N' Go Compatible	Dimensions								
							P (mm)	H (mm)	T (mm)	W (mm)	M (mm)	D (mm)	F (mm)	E (mm)	B (mm)
4B142DNA	300	Rockwell C57-C62	0.7	Rockwell C40	1.37	No	142	50	12	42	18.7	25	67	13	8.5
4B142DHA	450	Rockwell C57-C62	0.7	Rockwell C40	2.00	No	142	50	16	62	28	25	87	13	8.5
4B142TNA	300	Rockwell C57-C62	0.7	Rockwell C40	1.67	No	142	50	12	42	18.7	25	92	13	8.5
4B142THA	450	Rockwell C57-C62	0.7	Rockwell C40	2.32	No	142	49	16	62	28.5	25	112	13	8.5

Other sizes available on request.

Free Engineering Design Service - contact 4B or visit: www.go4b.com

BOLT 'N' GO™ ROUND LINK CHAINS

ROUND LINK CHAIN WITH BOLT 'N' GO FLIGHTS

PATENTED

Economical Round Link Chain System

Easy flight assembly by using a standard bolt and nut, connecting the flights directly to the link. The chain can be supplied in a coil together with the bolt-on flights already assembled.

Size 13 x 65mm

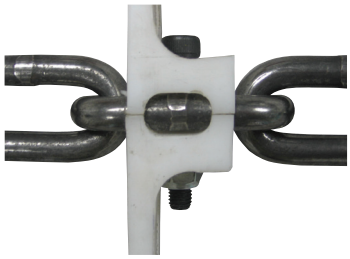

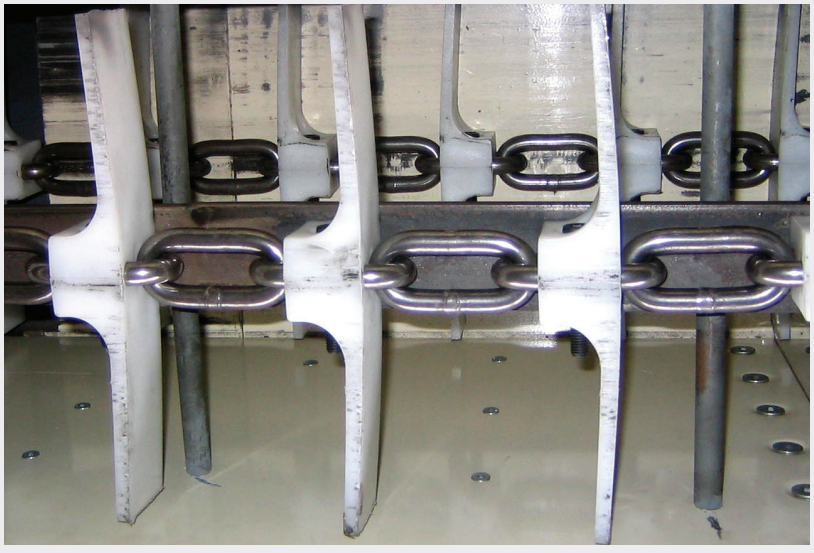

Bolt 'N' Go System Round Link Chain Application on a Conveyor

MISCELLANEOUS CONVEYOR CHAIN

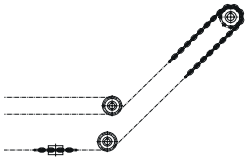

Separate datasheets available on demand

ACCESSORIES

NYLON FLIGHTS FOR SCRAPER CHAINS

'L' Shape with 1 fixing hole

'L' Shape with 2 fixing holes

'T' Shape with 2 fixing holes

- Easy to install or replace, cutting down installation and maintenance costs
- Eliminates the need for a bottom liner in the conveyor
- Reduces conveyor noise

NYLON FLIGHT SLEEVES FOR 102 NA CHAIN AND 142 NA CHAIN

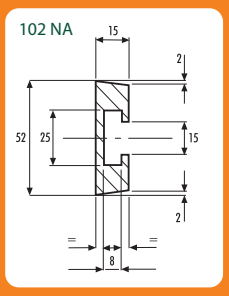

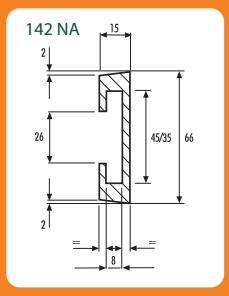

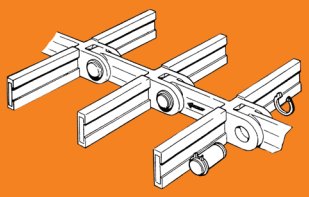

MANGANESE RAILS FOR FORGED CHAINS

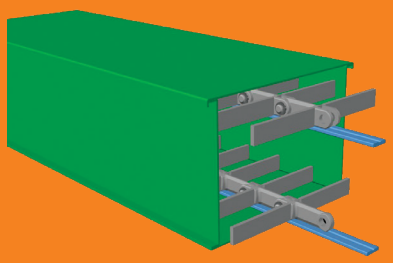

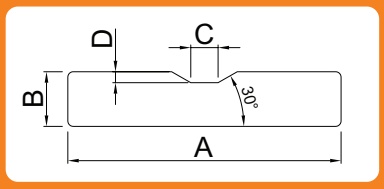

Sizes (mm)			
A	B	C	D
40	10	5	2
50	10	5	2
50	20	6	2
60	10	6	3
70	10	15	3

More sizes available on demand

SPROCKETS

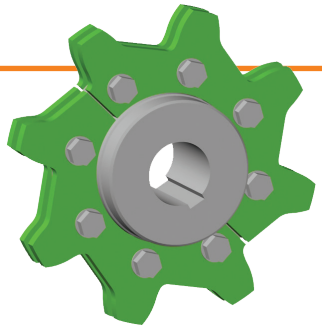

4B sprockets and trailers are manufactured from high grade heat treated steel to a minimum hardness of 57 HRC. Each piece is machined to size with appropriate bore and keyway specific to each customer's application. Most sizes are in stock and ready to ship from 4B's extensive inventory.

SPROCKETS

STANDARD SPROCKET
(SHOWN WITH HUB)

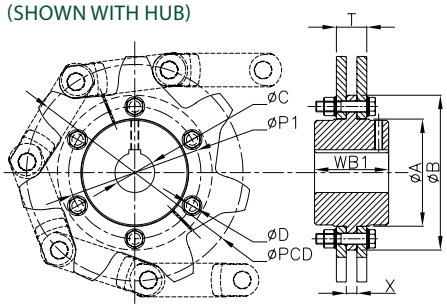

WEAR REVERSIBLE SPROCKET
(SHOWN WITH HUB)

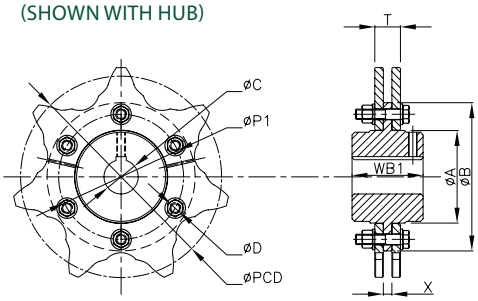

Chain Link	No. of Teeth	Pitch Circle Dia ØPCD (mm)	ØP1 (mm)	ØA (mm)	ØB (mm)	ØC max, Sprocket/ Stub Trailer (mm)	ØD (mm)	No. of Bolts	T (mm)	X (mm)	WB1 (mm)
4B102NA	6	204.0	-	105.0	135.0	70	–	–	30	10	83
	7	235.1	146.0	108.0	173.0	70	M12	6	30	10	83
	8	266.5	170.0	144.0	196.0	85	M12	6	30	10	83
	9	298.2	200.0	174.0	232.0	105	M12	6	30	10	83
	10	330.1	241.3	179.0	264.0	105	M12	8	30	10	83
4B142NA	6	284.0	168.3	136.5	190.5	85	M12	6	46	16	112
	7	327.3	200.0	162.0	234.0	105	M16	6	46	16	112
	8	371.1	241.3	187.3	282.0	115	M20	8	46	16	127
	9	415.2	285.8	240.0	330.0	150	M20	8	46	16	127
	10	459.5	285.8	240.0	330.0	150	M20	8	46	16	127
	11	504.0	368.3	310.0	419.0	170	M20	8	46	16	150
	12	548.6	415.0	345.0	465.0	170	M20	8	46	16	150
	13	593.4	450.0	380.0	521.0	170	M20	8	46	16	150
	14	638.1	470.0	380.0	546.0	170	M20	10	46	16	150
4B142HA	7	327.3	200.0	162.0	234.0	105	M16	6	69	19	127
	8	371.1	241.3	187.3	282.0	115	M20	8	69	19	150
	9	415.2	285.8	240.0	330.0	150	M20	8	69	19	150
	10	459.5	285.8	240.0	330.0	150	M20	8	69	19	150
	11	504.0	368.3	310.0	419.0	170	M20	8	69	19	150
	12	548.6	415.0	345.0	465.0	170	M20	8	69	19	150
	13	593.4	450.0	380.0	520.0	170	M20	8	69	19	180
	14	638.1	470.0	380.0	546.0	170	M20	10	69	19	180

Bore and keyway to customer specification.
Sprockets and trailers available for all chain sizes. Contact 4B for more information.

Free Engineering Design Service - contact 4B or visit: www.go4b.com

TRAILERS

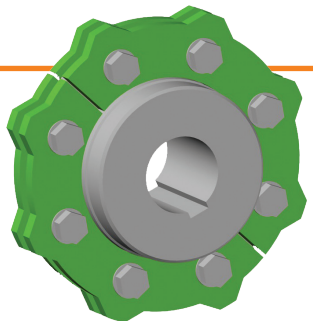

TRAILERS

SEGMENTAL STUB TRAILER (SHOWN WITH HUB)

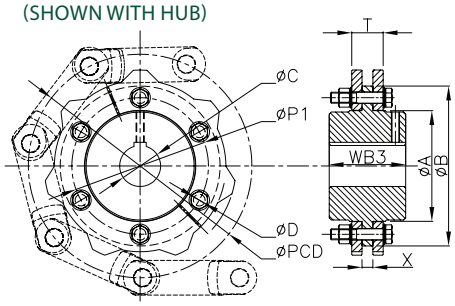

ASYMMETRIC SMOOTH TRAILER**

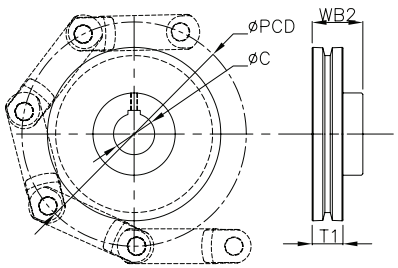

Chain Link	ØC max Smooth Trailer (mm)	Pitch Circle Dia. ØPCD (mm)	Hub Width* (mm)		Rim Width T1 (mm)
			Smooth WB2	Segmental WB3	
4B102NA	65	204.0	57	83	35
	65	235.1	57	83	35
	65	266.5	57	83	35
	65	298.2	57	83	35
	65	330.1	57	83	35
4B142NA	85	284.0	74	112	45
	85	327.3	74	112	45
	85	371.1	77	127	45
	115	415.2	77	127	45
	115	459.5	77	127	45
	115	504.0	105	150	45
	115	548.6	105	150	45
	115	593.4	120	150	45
	115	638.1	120	150	45
4B142HA	115	327.3	110	127	75
	115	371.1	110	150	75
	115	415.2	110	150	75
	115	459.5	120	150	75
	140	504.0	120	150	75
	140	548.6	120	150	75
	140	593.4	120	150	75
	140	638.1	140	150	75

* Smooth and segmental trailers have different hub widths as noted (WB2 & WB3).
** Symmetric smooth trailers on demand.

Bore and keyway to customer specification.
Sprockets and trailers available for all chain sizes. Contact 4B for more information.

APPLICATION PHOTOS

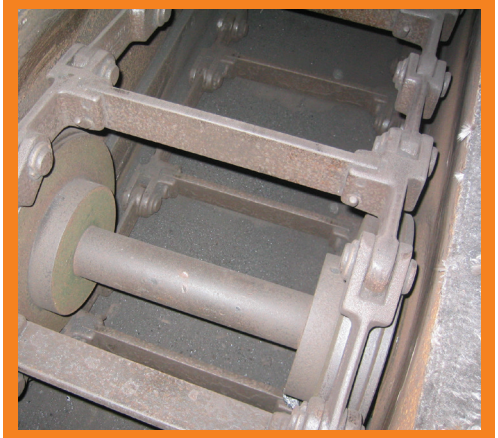

Typical Double Strand Chain Application

Feed Mill Application using Bolt 'N' Go Chain with Nylon Flights

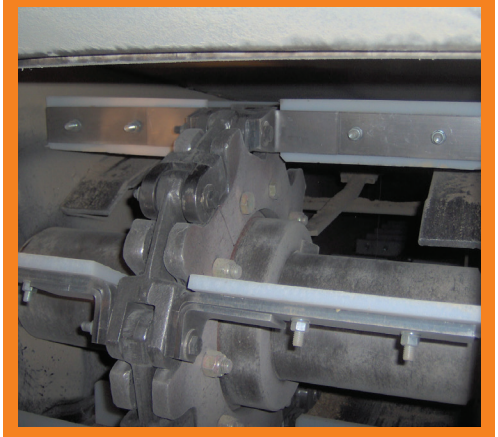

UHMW Paddles on "T" Plate Flights – Drive End

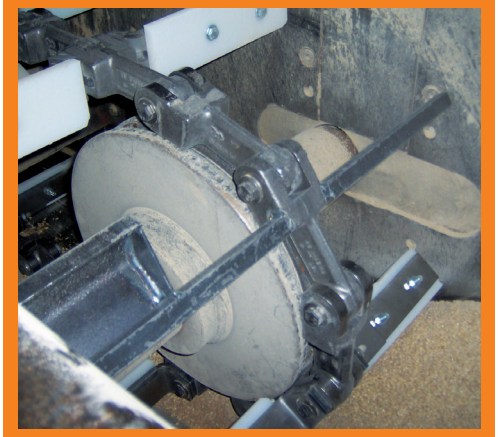

UHMW Paddles & Return Buckets – Tail End

4B catalogues also available:

- Electronics
- Elevator Belting
- Elevator Buckets
- Bolts & Fasteners

www.go4b.com

4B Braime Components

Headquarters
Hunslet Road
Leeds, LS10 1JZ, UK

Tel: +44 (0) 113 246 1800
Email: 4b-uk@go4b.com

4B Africa

14 Newport Business Park
Mica Drive
Kya Sand
2163 Johannesburg
South Africa

Tel: +27 (0) 11 708 6114
Email: 4b-africa@go4b.com

4B Components

625 Erie Avenue
Morton
IL 61550, USA

Tel: 309-698-5611

4B Asia Pacific

Build No.899/1 Moo 20
Soi Chongsiri
Bangplee-Tam Ru Road
Tanbon Bangpleeyai
Amphur Bangplee
Samutprakarn 10540
Thailand

Tel: +66 (0) 2173-4339
Email: 4b-asiapacific@go4b.com

4B China

F1, Building 5A, 8 West Lake Road, Wujin High & New Technology Development Zone, Changzhou 213164, Jiangsu Province, China

Tel: +86-519-88556006
Email: 4b-china@go4b.com

4B Australia

Building 1, 41 Bellrick Street
Acacia Ridge,
4110, Queensland
Australia

Tel: +61 (0) 7 3216 9365
Email: 4b-australia@go4b.com

4B France

9 Route de Corbie
80800 Lamotte Warfusée, France

Tel: +33 (0) 3 22 42 32 26
Email: 4b-france@go4b.com

4B Deutschland

9 Route de Corbie
F-80800 Lamotte Warfusée, France

Tel: +49 (0) 2333 601 681
Email: 4b-deutschland@go4b.com

Our policy is one of continuous improvement; therefore we reserve the right to amend specification without prior notice. All information contained herein is provided in good faith and no warranty is given or implied. E&OE.